SPECIFICATIONS
Length ..... 8.0'
Lay-up Length ..... 7.0'
Width ..... 47"
Height ..... 26.5"
Invert ..... 20.5"
Chamber Storage ..... 42.56 CuFt
Min. Storage with Stone . 56.81 CuFt

GENERAL NOTES
Recharger 280 HD by CULTEC, Inc. of Brookfield, CT.
All Recharger 280 HD chambers must be installed in accordance with all applicable local, state and federal regulations.
Refer to manufacturer, CULTEC, Inc.'s recommended installation guidelines.
All Recharger 280 HD H20 Heavy Duty units are marked with a 4" stripe along the length of the chamber.

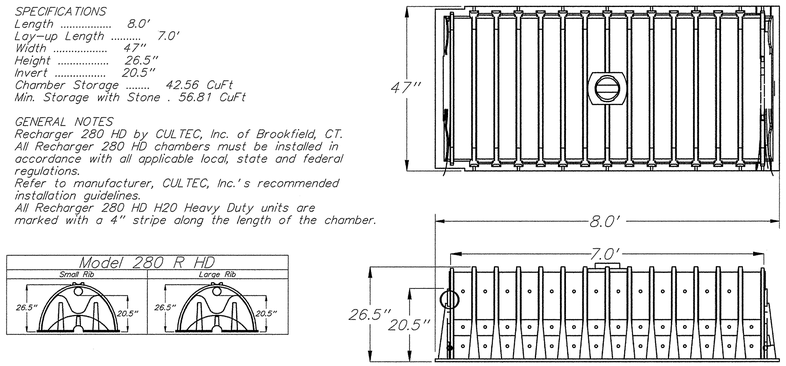

CULTEC Recharger 280HD Section View

(Not To Scale)

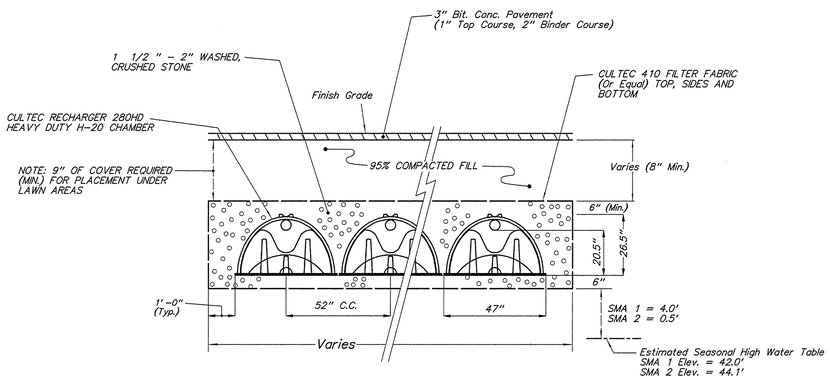

Chamber Installation Paved Traffic Application

(Not To Scale)

Stormwater Management Area	Bottom Of Stone Elev.	Bottom Of Chamber Elev.	Top Of Chamber Elev.	Length And Width To Edge Of Stone	Number Of Chambers
1	46.00'	46.50'	48.71'	37'-0" x 18'-11"	20
2	44.60'	45.10'	47.31'	37'-0" x 40'-7"	45

Schedule Of Drainage Structures & Piping

(Note: All Pipe Shall Be ADS N-12)

Structure	Rim	Reach	From Inv.	Dia. (in.)	Length	Slope ('/')	To Inv.	Structure	Rim
Catch Basin 1	52.90'	R-1	49.73'	12	11'	0.2045	47.48'	Drain Manhole 1	51.95'
Catch Basin 2	50.00'	R-2	47.56'	12	16'	0.0050	47.48'	Drain Manhole 1	51.95'
Drain Manhole 1	51.95'	R-3	47.28'	12	16'	0.0050	47.20'	First Defense 1	52.1'
Catch Basin 3	49.00'	R-4	46.56'	12	77'	0.0077	45.97'	Drain Manhole 2	49.4'
Catch Basin 4	48.60'	R-5	46.16'	12	23'	0.0083	45.97'	Drain Manhole 2	49.4'
Catch Basin 5	48.50'	R-6	46.06'	12	17'	0.0053	45.97'	Drain Manhole 2	49.4'
Catch Basin 6	48.70'	R-7	46.26'	12	17'	0.0171	45.97'	Drain manhole 2	49.4'
Drain Manhole 2	49.4'	R-8	45.77'	12	4'	0.0100	45.73'	First Defense 2	49.4'
Outlet Control Structure 1	50.5'	R-9	46.30'	12	20'	0.0150	46.0'	Flared End	----
Outlet Control Structure 2	50.1'	R-10	44.90'	12	33'	0.0121	44.5'	Flared End	----

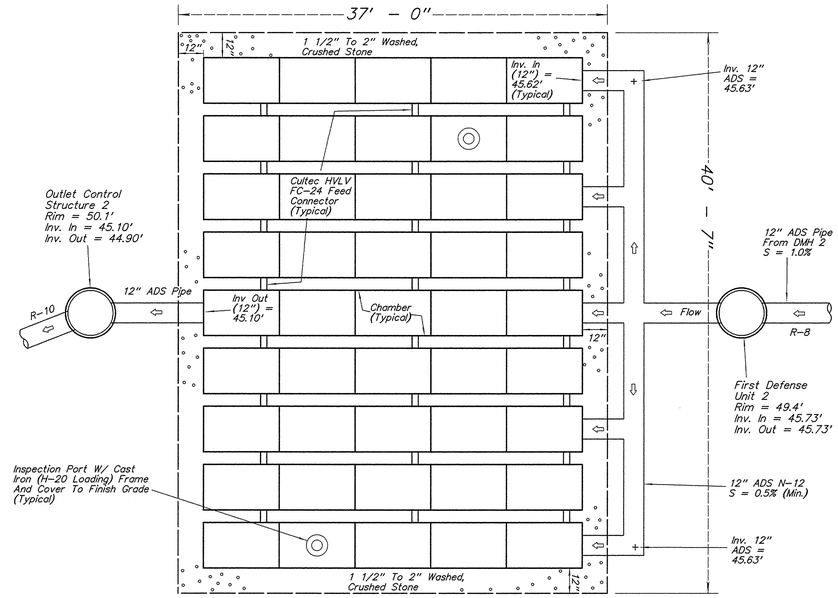

Stormwater Management Area No. 2

(Cultec Recharger 280HD Chambers - 45 Chambers)

(Note: All Pipe Shall Be ADS N-12)

(Not To Scale)

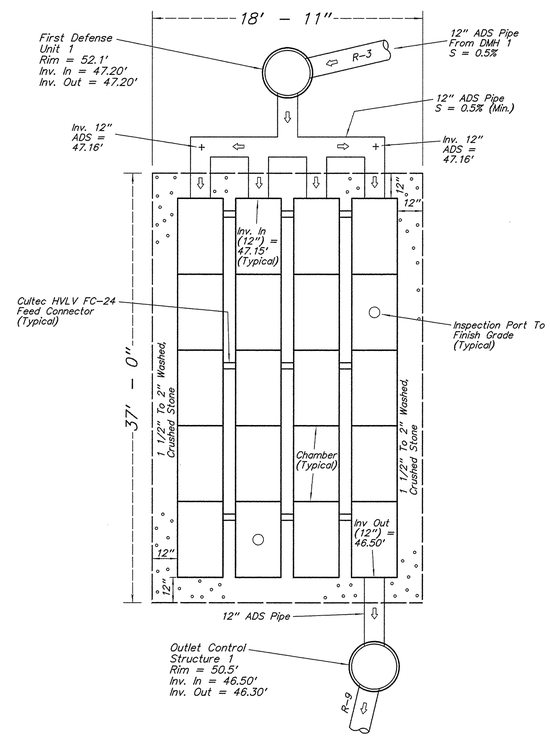

Stormwater Management Area No. 1

(Cultec Recharger 280HD Chambers - 20 Chambers)

(Note: All Pipe Shall Be ADS N-12)

(Not To Scale)

Plan Of Land
In
Topsfield, Mass.
Showing
Proposed Site Development
362 Boston Street
Prepared For
Walsh Properties LLC

Scale: As Noted Date: May 28, 2010

(Assessors Map 26 - Parcel 1)

Zoning Districts: Business District Highway North & Groundwater Protection District

Sheet 4 of 5 - Construction Details

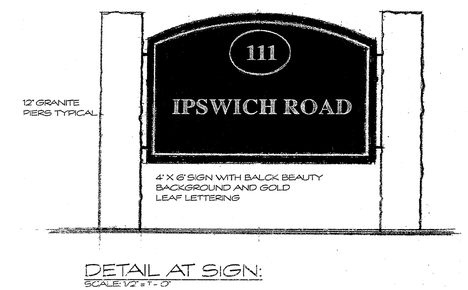

Sign Detail

(Scale: 1/2" = 1'-0")

STERNBERG LIGHTING 555 Lawrence Ave. Roselle, IL 60172 • 847-588-3400 • Fax 847-588-3440 www. sternberglighting.com Email: info@sternberglighting.com 11-09

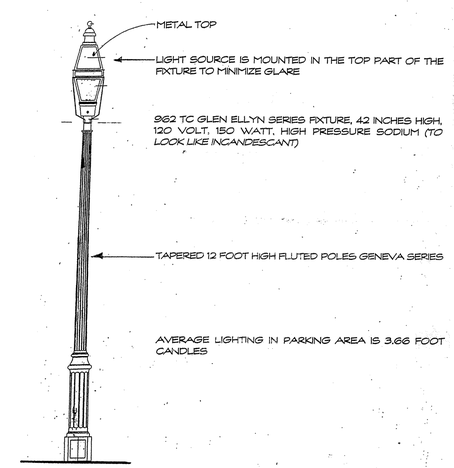

Lamp Post Detail

(Not To Scale)

COMMONWEALTH OF MASSACHUSETTS JOHN M. MORIN CIVIL No. 39836 REGISTERED PROFESSIONAL ENGINEER

The Neve - Morin Group, Inc.
Engineers - Surveyors - Environmental
Consultants - Land Use Planners
447 Old Boston Road - U.S. Route 1
Topsfield, Massachusetts 01983 978-887-8586